MEISSEN

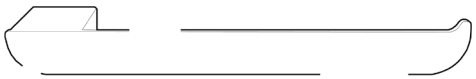

PRODUCT DATA SHEET

AVILO ACCESSORIES COLLECTION

DOUBLE BLACK

ENJOY PREMIUM LIVING
WITH **MEISSEN.**

VISIT OUR WEBSITE AT **WWW.MYMEISSEN.COM**

DOUBLE BLACK ACCESSORIES - PRODUCT DATA SHEET

BATHROOM COLLECTION - AVILO

MBAROBHB Robe hook

Product details

Finish

Matt Black

Material

Stainless Steel
Powder Coated

Information

- 304 Stainless steel screws
- Sturdy fixing bracket

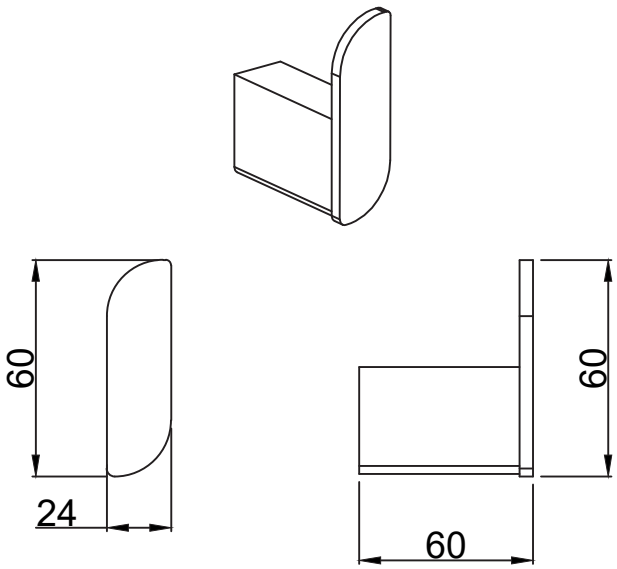

ENJOY PREMIUM LIVING
WITH **MEISSEN.**

10 YEAR GUARANTEE ON CHROME
5 YEAR GUARANTEE ON COLOURS
VISIT OUR WEBSITE AT **WWW.MYMEISSEN.COM**

DOUBLE BLACK ACCESSORIES - PRODUCT DATA SHEET

BATHROOM COLLECTION - AVILO

MBABSOADB Glass soap dish

Product details

Finish

Matt Black

Material

Stainless Steel
Powder Coated

Information

- 304 Stainless steel screws
- Sturdy fixing bracket
- Frosted glass dish

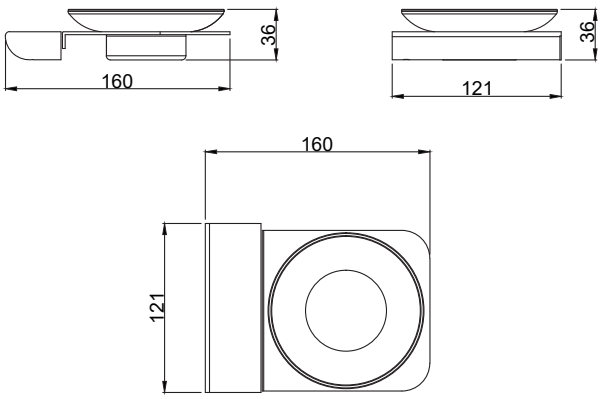

ENJOY PREMIUM LIVING
WITH **MEISSEN.**

10 YEAR GUARANTEE ON CHROME
5 YEAR GUARANTEE ON COLOURS
VISIT OUR WEBSITE AT **WWW.MYMEISSEN.COM**

DOUBLE BLACK ACCESSORIES - PRODUCT DATA SHEET

BATHROOM COLLECTION - AVILO

MBATUMHB Glass tumbler holder

Product details

Finish

Matt Black

Material

Stainless Steel
Powder Coated

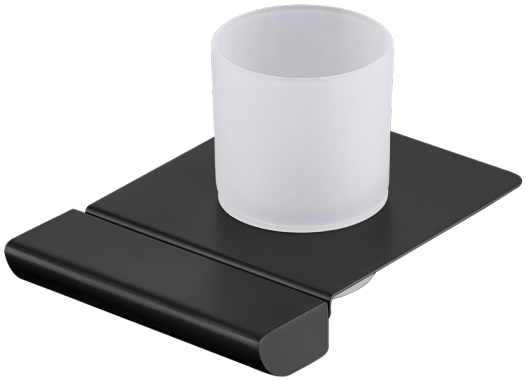

Information

- 304 Stainless steel screws
- Sturdy fixing bracket
- Frosted glass tumbler

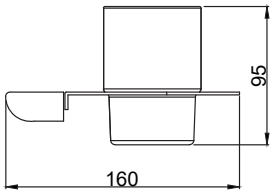

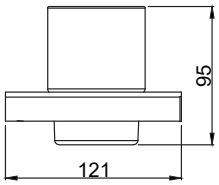

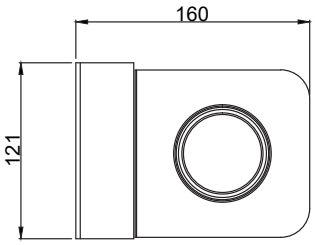

ENJOY PREMIUM LIVING
WITH **MEISSEN.**

10 YEAR GUARANTEE ON CHROME
5 YEAR GUARANTEE ON COLOURS
VISIT OUR WEBSITE AT **WWW.MYMEISSEN.COM**

DOUBLE BLACK ACCESSORIES - PRODUCT DATA SHEET

BATHROOM COLLECTION - AVILO

MBAPAPHB Toilet paper holder

Product details

Finish

Matt Black

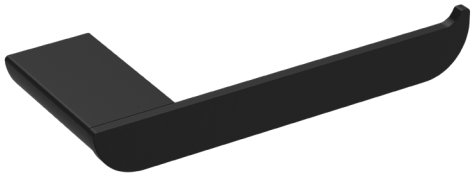

Material

Stainless Steel
Powder Coated

Information

- 304 Stainless steel screws
- Sturdy fixing bracket

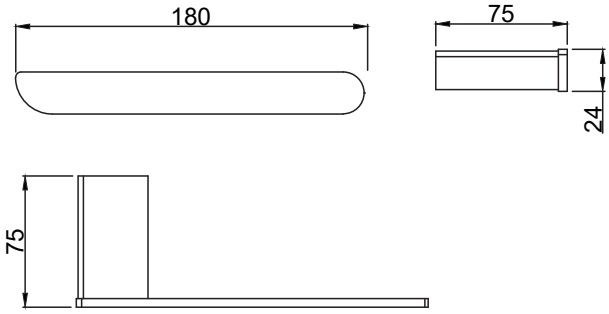

ENJOY PREMIUM LIVING
WITH **MEISSEN.**

10 YEAR GUARANTEE ON CHROME
5 YEAR GUARANTEE ON COLOURS
VISIT OUR WEBSITE AT **WWW.MYMEISSEN.COM**

DOUBLE BLACK ACCESSORIES - PRODUCT DATA SHEET

BATHROOM COLLECTION - AVILO

MBATOWHB Towel holder

Product details

Finish

Matt Black

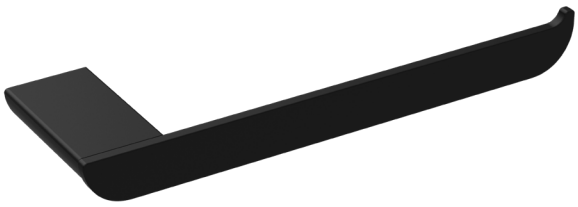

Material

Stainless Steel
Powder Coated

Information

- 304 Stainless steel screws
- Sturdy fixing bracket

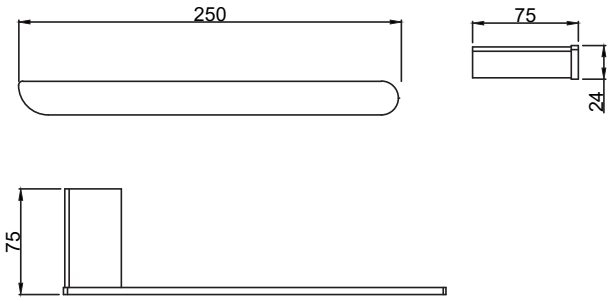

ENJOY PREMIUM LIVING
WITH **MEISSEN.**

10 YEAR GUARANTEE ON CHROME
5 YEAR GUARANTEE ON COLOURS
VISIT OUR WEBSITE AT **WWW.MYMEISSEN.COM**

DOUBLE BLACK ACCESSORIES - PRODUCT DATA SHEET

BATHROOM COLLECTION - AVILO

MBAGSHELFB Glass shelf

Product details

Finish

Matt Black

Material

Stainless Steel
Powder Coated

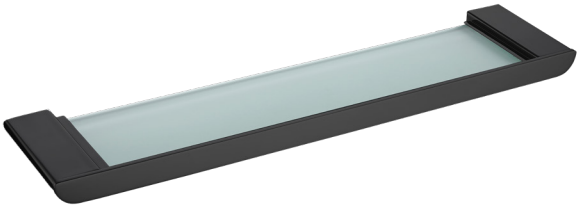

Information

- 304 Stainless steel screws
- Sturdy fixing bracket
- Frosted glass shelf

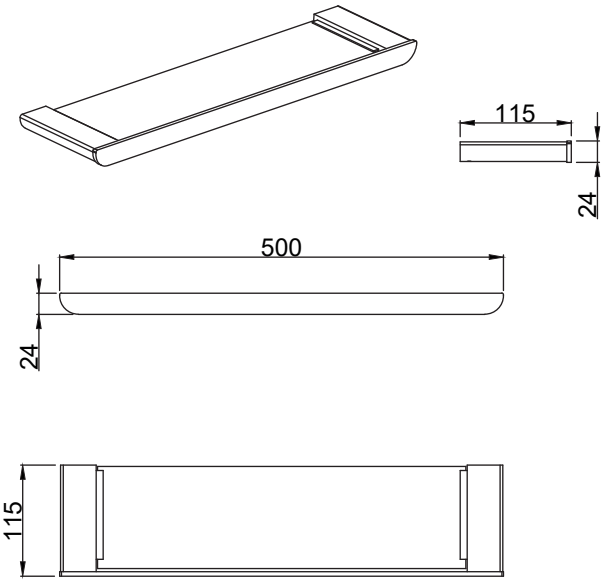

ENJOY PREMIUM LIVING
WITH **MEISSEN.**

10 YEAR GUARANTEE ON CHROME
5 YEAR GUARANTEE ON COLOURS
VISIT OUR WEBSITE AT **WWW.MYMEISSEN.COM**

DOUBLE BLACK ACCESSORIES - PRODUCT DATA SHEET

BATHROOM COLLECTION - AVILO

MBATOWRSHB Towel rail & shelf

Product details

Finish

Matt Black

Material

Stainless Steel
Powder Coated

Information

- 304 Stainless steel screws
- Sturdy fixing bracket
- 600mm Long rail and shelf

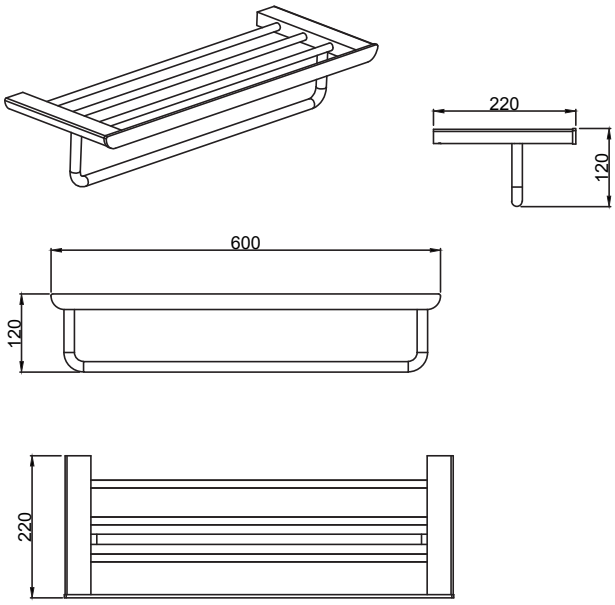

ENJOY PREMIUM LIVING
WITH **MEISSEN.**

10 YEAR GUARANTEE ON CHROME
5 YEAR GUARANTEE ON COLOURS

VISIT OUR WEBSITE AT **WWW.MYMEISSEN.COM**

DOUBLE BLACK ACCESSORIES - PRODUCT DATA SHEET

BATHROOM COLLECTION - AVILO

MBATOWSRB Single towel rail

Product details

Finish

Matt Black

Material

Stainless Steel
Powder Coated

Information

- 304 Stainless steel screws
- Sturdy fixing bracket
- 600mm Long rail

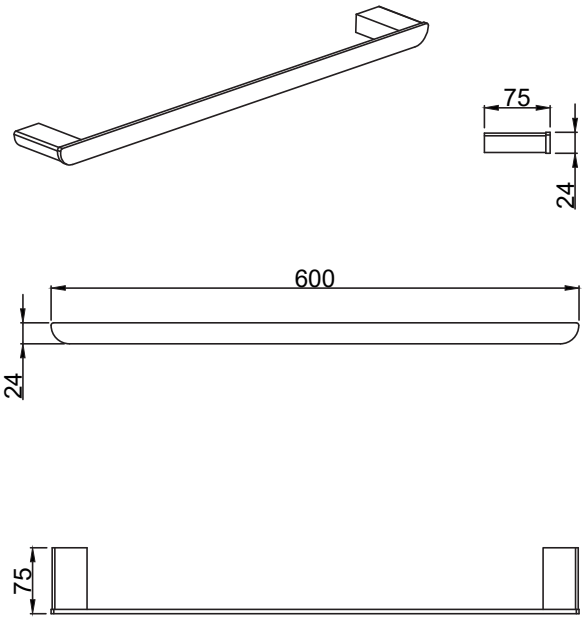

ENJOY PREMIUM LIVING
WITH **MEISSEN.**

10 YEAR GUARANTEE ON CHROME
5 YEAR GUARANTEE ON COLOURS

VISIT OUR WEBSITE AT **WWW.MYMEISSEN.COM**

DOUBLE BLACK ACCESSORIES - PRODUCT DATA SHEET

BATHROOM COLLECTION - AVILO

MBATOWDRB Double towel rail

Product details

Finish

Matt Black

Material

Stainless Steel
Powder Coated

Information

- 304 Stainless steel screws
- Sturdy fixing bracket
- 600mm Long double rail

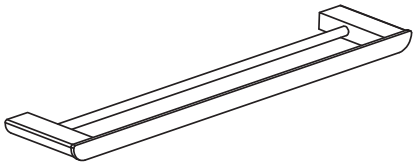

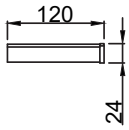

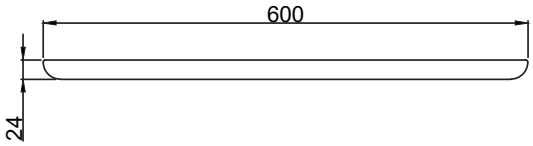

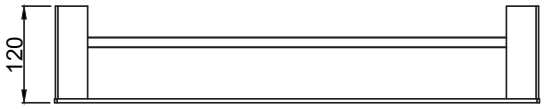

ENJOY PREMIUM LIVING
WITH **MEISSEN.**

10 YEAR GUARANTEE ON CHROME
5 YEAR GUARANTEE ON COLOURS

VISIT OUR WEBSITE AT **WWW.MYMEISSEN.COM**

DOUBLE BLACK ACCESSORIES - PRODUCT DATA SHEET

BATHROOM COLLECTION - AVILO

MBATOIBB Toilet brush holder

Product details

Finish

Matt Black

Material

Stainless Steel
Powder Coated

Information

- 304 Stainless steel screws
- Sturdy fixing bracket
- Frosted glass bowl

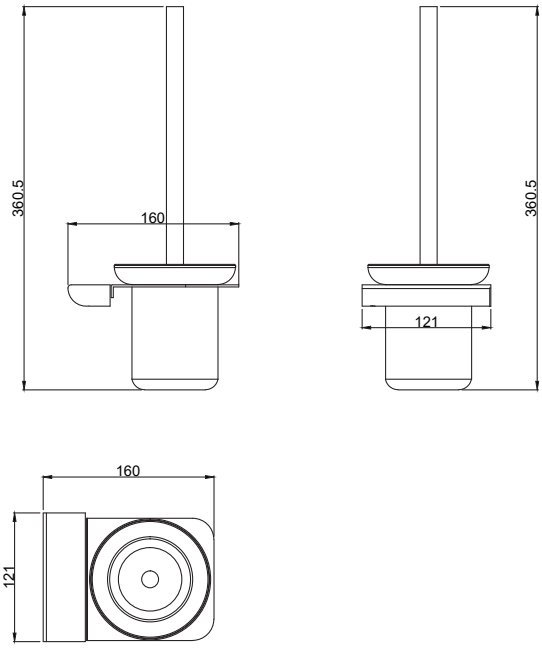

ENJOY PREMIUM LIVING
WITH **MEISSEN.**

10 YEAR GUARANTEE ON CHROME
5 YEAR GUARANTEE ON COLOURS

VISIT OUR WEBSITE AT **WWW.MYMEISSEN.COM**